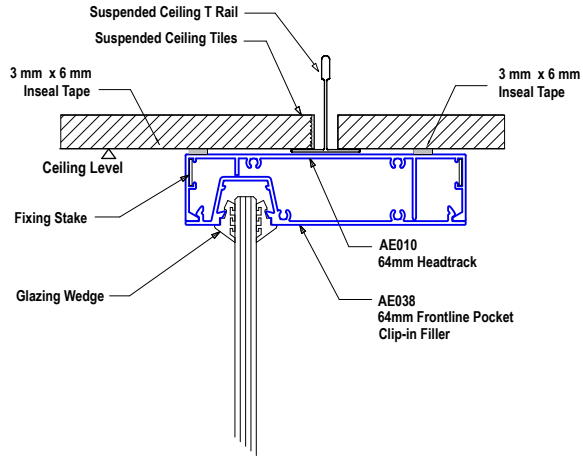
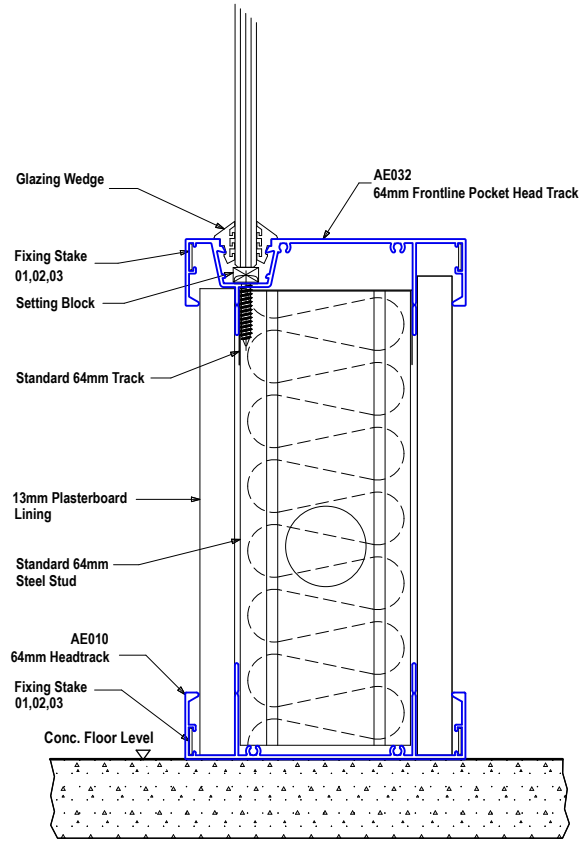
Selected Glazing To Comply With Glazing Standards